Pro

ProConnect **24**/mw

FEATURES

- Weatherproof straight blade ANSI NEMA type receptacles.
- 2405 cover may be locked closed to limit accessibility.
- Heavy duty mounting pads.
- Silicone lubricant provided for cover screws and flange.
- Neoprene gasket resists petroleum.
- Available in 125v AC and 250v AC.
- Horizontal or vertical configurations available.

APPLICATIONS
- Damp or wet locations

APPROVALS
- Conforms to IP52
- ABS

TECHNICAL SPECIFICATIONS

BOX
Cast copper free aluminum.

COVER
Cast aluminum with an electrostatically applied polyester powder coat finish.

HARDWARE
Stainless steel.

GASKET
One piece neoprene.

ENTRIES
Standard units undrilled. Up to four 1” NPT outlets available. See ENTRY OPTIONS for selections.

VOLTAGE
15/20 Amp 125v AC ANSI NEMA 5-15/20R
15/20 Amp 250v AC ANSI NEMA 6-15/20R

MOUNTING
Surface, via two maximum ¼” mounting bolts (not included).

COOPER Crouse-Hinds
PAULUHN

ORDERING REFERENCES

PART NUMBER	DESCRIPTION	WEIGHT LBS
2405A-125	125V Vertical	1.8
2407A-125	125V Horizontal	1.8
2405A-250	250V Vertical	1.8
2407A-250	250V Horizontal	1.8

SPECIAL OPTIONS

GF - Ground Fault Circuit Interrupter Receptacle (for 125v AC only)

ENTRY OPTIONS

NPT Trade Size	Dead End	Thru Feed	X-Positions
1/2”	E1	C1	X1
3/4”	E2	C2	X2
1”	E3	C3	X3

* Entries on short side of casting.

SPARE PARTS

Part No.	Description
INX6030A-H	BOX
INX3164	RECEPTACLE, 125v
INX3165	RECEPTACLE, 250v
INX6549A	COVER, Vertical
INX6549A-GFI	GFI COVER, Vertical
INX6501A	COVER, Horizontal

DIMENSIONS

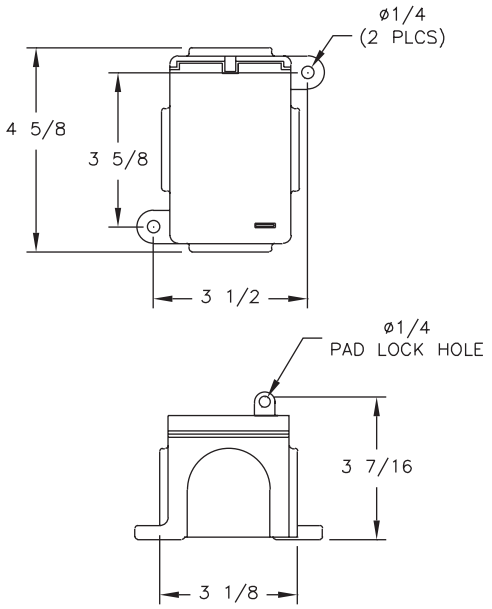

2405A–125

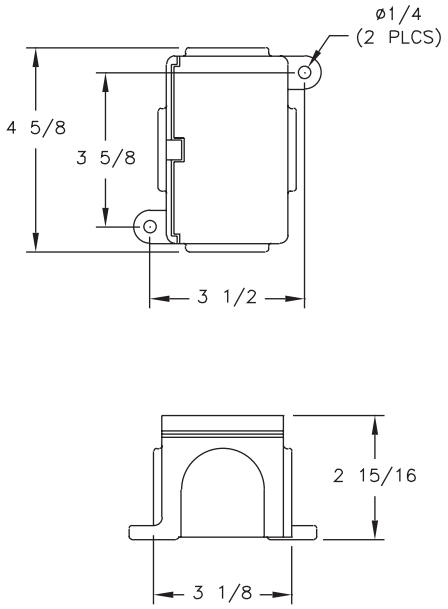

2407A–125

Dimensions in inches